Koyo®

Incremental Encoder

TRD-2E/2EH

Operation Manual

Thank you for purchasing series TRD-2E and TRD-2EH Incremental Encoder.Please read this Operation Manual carefully before applying this product.

KOYO ELECTRONICS (WUXI) CO.,LTD.

Add: 21st Floor, Building 1, No.599, Jianzhuxi Road, Binhu District, Wuxi, Jiangsu, P.R.China

Pc: 214072

Tel: (0510)85167888

Fax: (0510)85161393

KEW-8161C-E

■ Safety Consideration

⚠Warning	This indicates contents which can cause large accidents leading to loss of life or severe injury when the indication is disregarded and wrong handling is executed.
⚠Caution	This indicates contents which can cause injury or material damage when the indication is disregarded and wrong handling is executed.

Explanation of the pictograms

⊘ This symbol indicates a general prohibition.

❗ This symbol indicates a compulsory item or an instruction.

[Operating environment and conditions]

⚠Warning

- ⊘ Do not use in a combustible or explosive atmosphere. Otherwise personal injury or fire may be caused.
- ⊘ Do not use this product for applications related to human safety. Use is assumed in an application where an accident or incorrect use will not immediately cause danger to humans.

[Operating environment and conditions]

⚠Caution

- ❗ Use and store the equipment within the scope of the environment(vibrations,impact,temperature,humidity,etc.) specified in the specifications. Otherwise fire or product damage may be caused.
- ❗ Understand the product first before use it.

[Installation and wiring]

⚠Warning

- ❗ Use only with the power supply voltage listed in the specifications. Otherwise fire,electric shock,or accidents may be caused.
- ❗ Use only with the wiring and layout specified in the specifications. Otherwise fire,electric shock,or accidents may be caused.
- ❗ Do not apply any kind of stress to the wires. Otherwise electric shock or fire may be caused.

■ Output circuit

● **Open Collector Output**

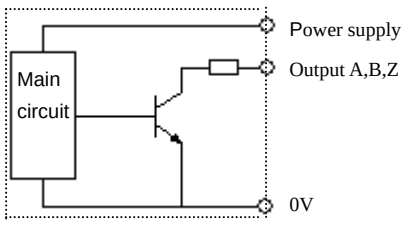

● **Line driver Output**

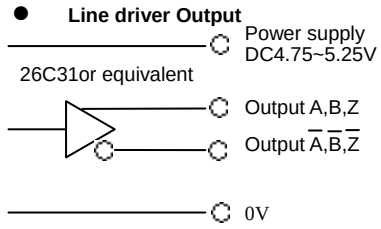

■ Connection

The shield wire（GND）is not connected to the encoder body.

● **TRD－2E□A/B**

● **TRD－2EH□A/B**

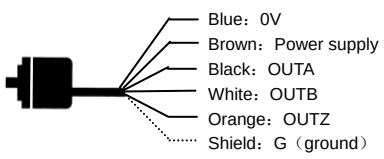

● **TRD－2E□V**

● **TRD－2EH□V**

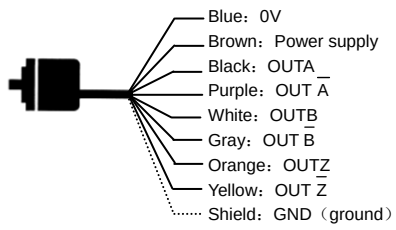

■ Electrial specifications

Type No.			TRD－2E□A/B/TRD－2EH□A/B	TRD－2E□V /TRD－2EH□V
Power supply	Operating voltage		A: DC4.75V～13.2V	DC4.75V～5.25V
			B: DC10.8V～26.4V	
	Allowable ripple		3%rms Max.	3%rms Max.
	Current consumption		50mA Max.	50mA Max.
Output waveform	Signal format		Quadrature output	Quadrature output
	Max. response frequency		200kHz	200kHz
	Operating speed		(Maximum response frequency/Pulse)×60	(Maximum response frequency/Pulse)×60
	Symmentry		50±25%	50±25%
	Quadrature phasing		25±12.5%	25±12.5%
	Index signal width		100±50%	100±50%
Output	Rising/falling time		≤1μs（with a cable of 1m）	—
	Output configuration		NPN open collector	Line driver(26C31 or equivalent)
	Output logic		Negative logic (active low)	Positive logic(active high)
	Output current	Inflow	30mA Max.	—
		Outflow	—	—
	Output voltage	"H"	—	2.5V Min.
		"L"	0.4V Max.	0.5V Max.
	Load power supply voltage		DC30V Max.	—
	Short-circuit protection		Between output and power supply	—

■ Output signal timing chart

（CW rotation viewed from input-shaft of encoder)

● **TRD－2E□A/B**

● **TRD－2EH□A/B**

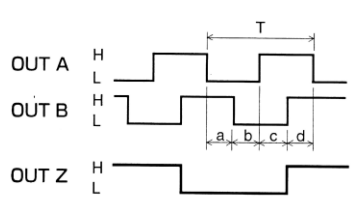

● **TRD－2E□V**

● **TRD－2EH□V**

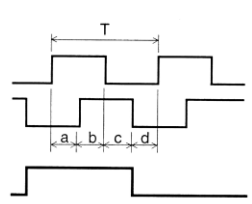

a,b,c,d=（25±12.5%）T

■ Mechanical specifications

Starting torque		Max. 0.01N・m（＋20℃）
Shaft moment of intertia		0.3×10^{-6} kg・m^2
Max. allowable shaft load	Radial	30N
	Thrust	20N
Max.allowable speed		5000rpm
Cable	Material	Oil-resistant PVC *1
	Nominal core cross section	0.14mm^2
	External diameter	Φ5mm
Weight		Approx.200g (with 1m cable)

*1 2E□A/B、2EH□A/B：5-core shielded cable（AWG26）

2E□V、2EH□V ：8-core shidlded cable（AWG26）

■ Environmental requirements

Ambient temperature	Operation	－10～＋70℃
	Store	－25～＋85℃
Ambient humidity		35～85%RH（non-condensing）
Withstand voltage		AC500V（50/60Hz）for 1 min.
Insulation resistance		50MΩ min.
Vibration resistance		10～55Hz with 0.75mm amplitude *2
Shock resistance		11ms with 490m/s^2 *3
Protection construction		IP54 (IEC529)

*2: Durable for 1h along 3 axes

*3: Applied 3 times 3 axes

■ External dimensions

● **TRD－2E□A/B/V**

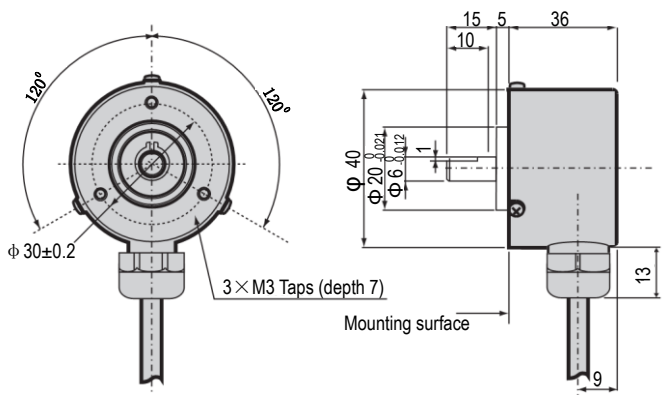

● **TRD－2EH□A/B/V**

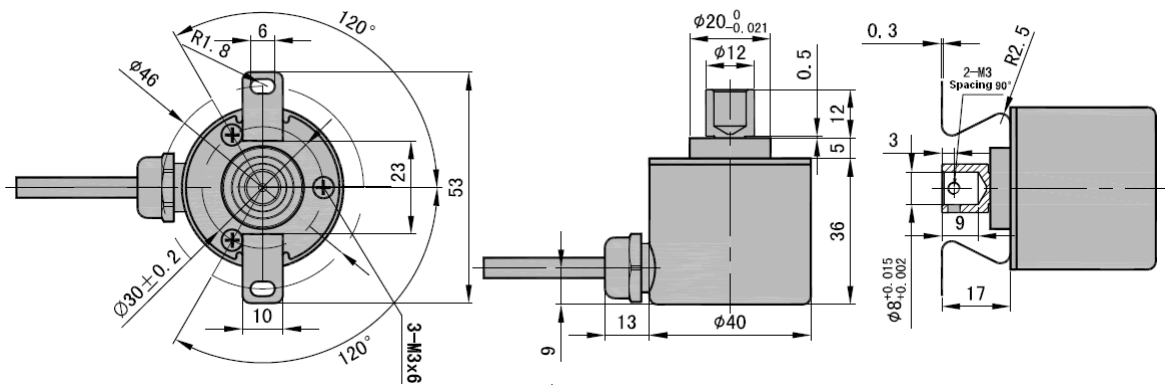

■ Cautions for use

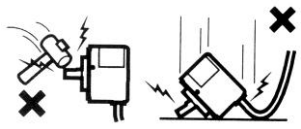

- Do not wire the cable in parallel with other power lines and do not share a duct with other cables.
- Use capacitors or surge absorption elements to remove the sparks caused by relays and switches in the control panel as far as possible.
- Be sure to connect all wires properly,as wrong wiring can damage the internal circuitry.
- Erroneous pulses may be caused at the time of power ON and power OFF.After power ON,wait for at least 0.5 sec. before use.
- Do not disassemble the product.
- As the rotary encoder is composed of precision parts,its function will be impaired when it is subjected to shocks.Use sufficient care for handling and mounting.

■ Options

● Coupling

RU－075

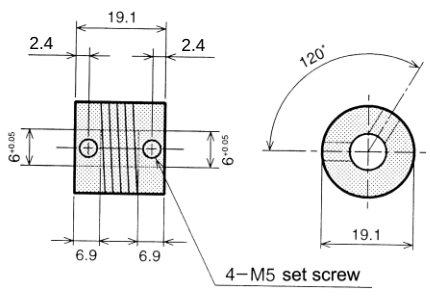

GJ－6

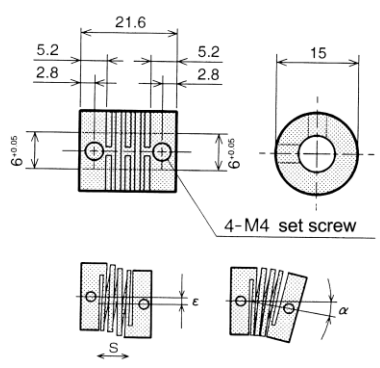

Type No.	Material	α	ε	s
RU－075	Aluminum alloy（7075）	5° MAX	0.25mmMAX	0.12mmMAX
GJ－6	Glass-fiber reinforced polyacetal resin	5° MAX	0.5mmMAX	0.12mmMAX